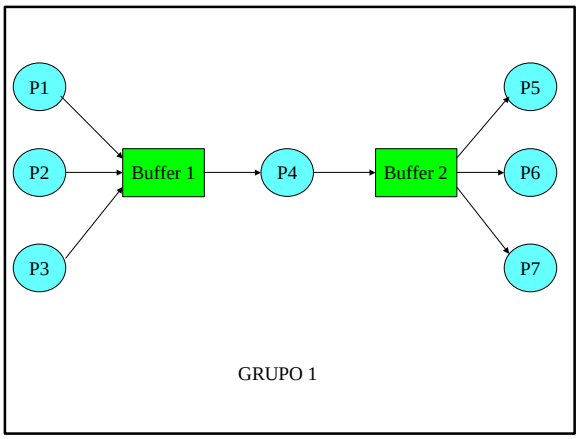
P1
P2
P3
Buffer 1
P4
Buffer 2
P5
P6
P7
GRUPO 1

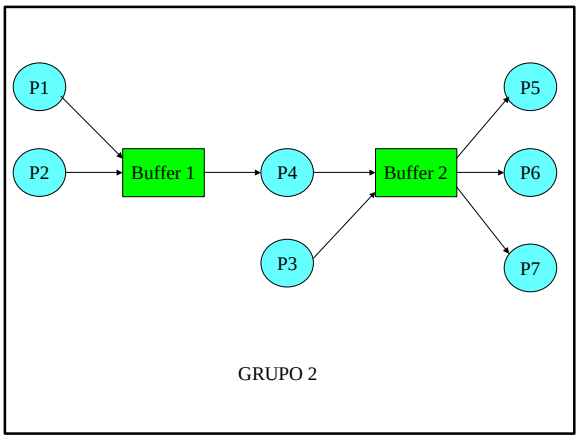
P1
P2
Buffer 1
P4
P3
Buffer 2
P5
P6
P7
GRUPO 2

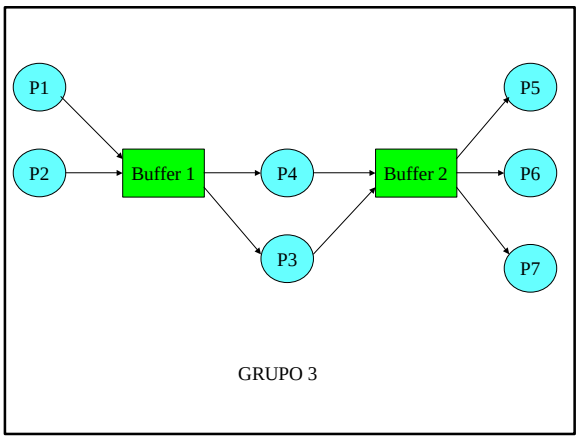
P1
P2
Buffer 1
P4
P3
Buffer 2
P5
P6
P7
GRUPO 3

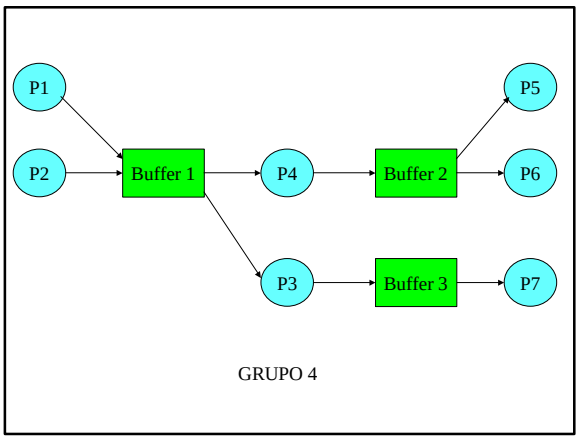
P1
P2
Buffer 1
P4
P3
Buffer 2
Buffer 3
P5
P6
P7
GRUPO 4

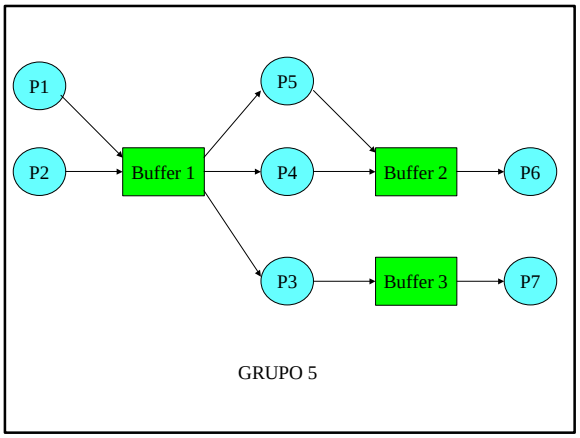
P1
P2
Buffer 1
P5
P4
P3
Buffer 2
Buffer 3
P6
P7
GRUPO 5

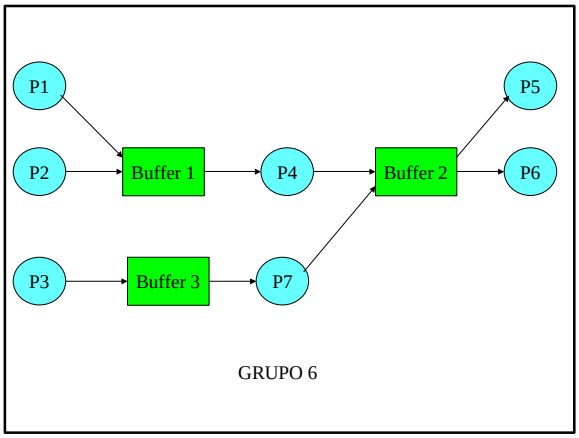
P1
P2
P3
Buffer 1
Buffer 3
P4
P7
Buffer 2
P5
P6
GRUPO 6

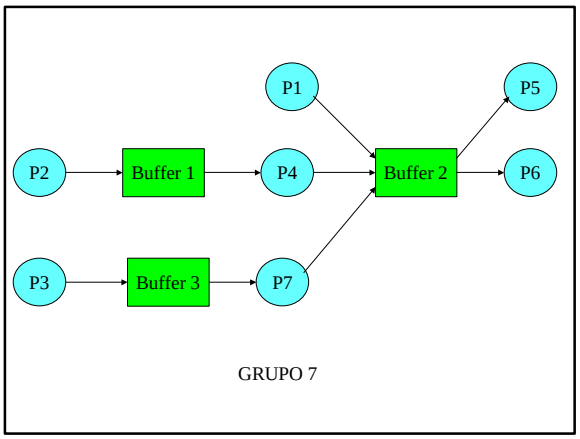
P1
P5
P2
Buffer 1
P4
Buffer 2
P6
P3
Buffer 3
P7
GRUPO 7

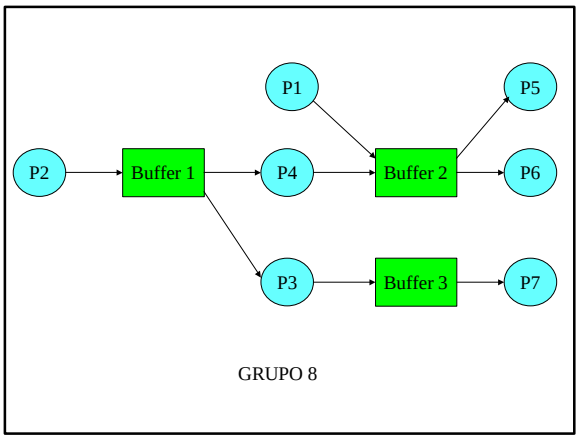
P1
P5
P2
Buffer 1
P4
Buffer 2
P6
P3
Buffer 3
P7
GRUPO 8

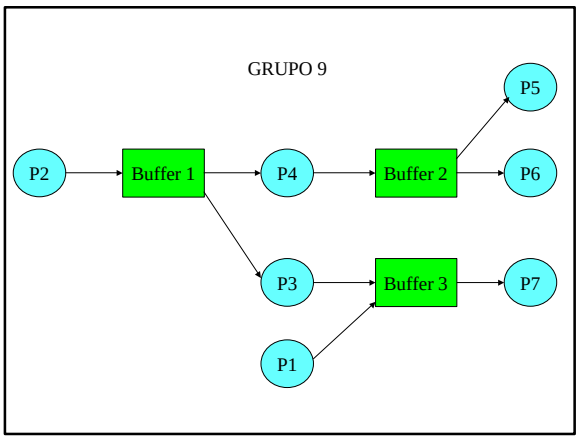
GRUPO 9
P5
P2
Buffer 1
P4
Buffer 2
P6
P3
Buffer 3
P7
P1

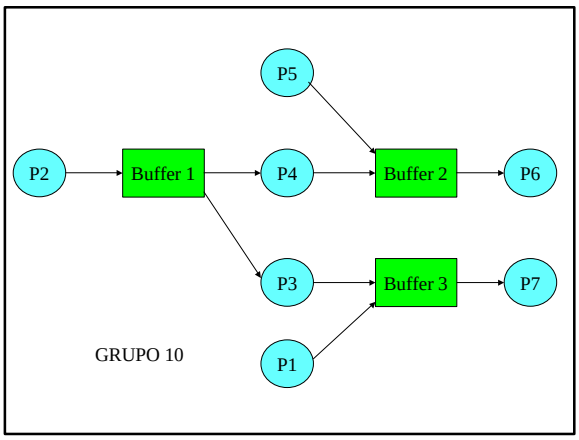
P5
P2
Buffer 1
P4
Buffer 2
P6
P3
Buffer 3
P7
GRUPO 10
P1

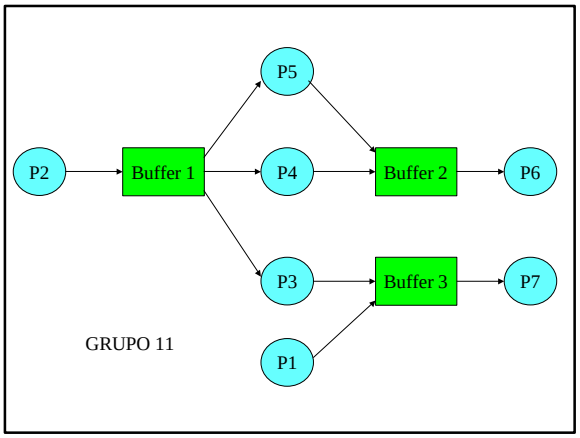
P5
P2
Buffer 1
P4
Buffer 2
P6
P3
Buffer 3
P7
GRUPO 11
P1

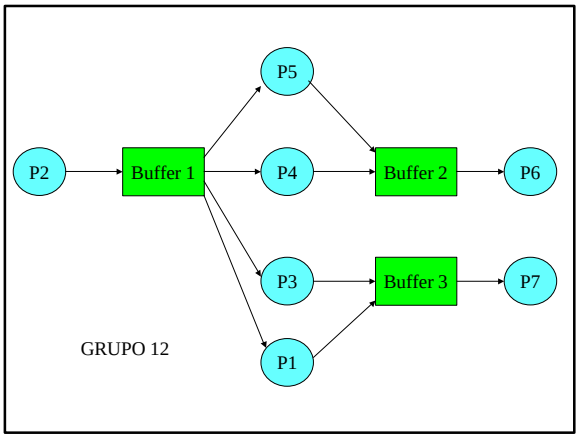
P5
P2
Buffer 1
P4
Buffer 2
P6
P3
Buffer 3
P7
GRUPO 12
P1